Work Order ID 72426

Monday, July 25, 2011 1:46:05 PM

Rush MUST SHIP JULY 27

Item ID: D3315-5 **Accept** **Setup Start** **Stop**

Revision ID:

Item Name: Wearplate

Start Date: 7/25/2011 **Start Qty:** 2.00 **Cust Item ID:**

Required Date: 7/26/2011 **Req'd Qty:** 2.00 **Customer:**

Reference:

Approvals: **Process Plan:** H **Date:** 11-07-25 **Tooling:** _____ **Date:** _____ **Run Start** **Stop**

QC: _____ **Date:** _____ **SPC (Y/N):** _____ **Date:** _____

Sequence ID/ Work Center ID	Operation Description	Set Up/ Run Hours	Tool ID	Tool #	Plan Code	Accept Qty	Reject Qty	Reject Number	Insp. Stamp
Draw Nbr	**Revision Nbr**								
D3315	Rev B								
100 Waterjet FLOW CNC Waterjet	FLOW WATER JET	0.00	11/07/25			2			
	Memo 1-Cut as per Dwg D3315 Dwg Rev: B Prog Rev: B 2-Deburr if necessary	0.00							
110 QC Quality Control	QC2- Inspect parts off machine FAI/FAIB	0.00	11/07/25			2			
	Memo	0.00							
120 QC Quality Control	QC8- Inspect parts - second check	0.00				H	11	07	26 (2)
	Memo	0.00							

Dart Aerospace Ltd

W/O:		WORK ORDER CHANGES					
DATE	STEP	PROCEDURE CHANGE	By	Date	Qty	Approval Chief Eng / Prod Mgr	Approval QC Inspector

Part No: _____ **PAR #:** _____ **Fault Category:** _____ **NCR:** Yes No **DQA:** _____ **Date:** _____

Resolution: _____ **Disposition:** _____ **QA: N/C Closed:** _____ **Date:** _____

NCR:		WORK ORDER NON-CONFORMANCE (NCR)						
DATE	STEP	Description of NC Section A	Corrective Action Section B			Verification Section C	Approval Chief Eng	Approval QC Inspector
			Initial Chief Eng	Action Description Chief Eng	Sign & Date			

NOTE: Date & initial all entries

H:\fFORMS\Quality Assurance\approved QA\NCRWO RevE

Work Order ID 72426

Monday, July 25, 2011 1:46:06 PM

Item ID: D3315-5 **Accept** **Setup Start**

Revision ID: **Stop**

Item Name: Wearplate

Start Date: 7/25/2011 **Start Qty:** 2.00 **Cust Item ID:**

Required Date: 7/26/2011 **Req'd Qty:** 2.00 **Customer:**

Reference:

Approvals: **Process Plan:** _____ **Date:** _____ **Tooling:** _____ **Date:** _____ **Run Start**

QC: _____ **Date:** _____ **SPC (Y/N):** _____ **Date:** _____ **Stop**

Sequence ID/ Work Center ID	Operation Description	Set Up/ Run Hours	Tool ID	Tool #	Plan Code	Accept Qty	Reject Qty	Reject Number	Insp. Stamp
130		0.00							
Brake NC	NC BRAKE					2			
Brake NC	**Memo**	0.00							
	1- Form using DT8751 Die as per Dwg D3315Rev: B 2- Form using DT8179 Die as per Dwg D3315Rev: B	SB 11/07/26							
140	QC6- Inspect dimensions to drawing	0.00							
QC							11	07	26 2
Quality Control	**Memo**	0.00							
150		0.00							
Large Fab	Large Fab					EL 11-7-26 X2			
Large Fab	**Memo**	0.00							

Weld hard surface using D3315-5T3 as per QSI 004 and Dwg D3315 Rev: B

Qty	Part Number	Description	Batch
A/R	N/A	7560 Hardcoat Rod	M117139

Dart Aerospace Ltd

W/O:		WORK ORDER CHANGES					
DATE	STEP	PROCEDURE CHANGE	By	Date	Qty	Approval Chief Eng / Prod Mgr	Approval QC Inspector

Part No: _____ **PAR #:** _____ **Fault Category:** _____ **NCR:** Yes No **DQA:** _____ **Date:** _____

Resolution: _____ **Disposition:** _____ **QA: N/C Closed:** _____ **Date:** _____

NCR:		WORK ORDER NON-CONFORMANCE (NCR)						
DATE	STEP	Description of NC Section A	Corrective Action Section B			Verification Section C	Approval Chief Eng	Approval QC Inspector
			Initial Chief Eng	Action Description Chief Eng	Sign & Date			

NOTE: Date & initial all entries

H:\fFORMS\Quality Assurance\approved QA\NCRWO RevE

Work Order ID 72426

Monday, July 25, 2011 1:46:06 PM

Item ID: D3315-5 **Accept** **Setup Start**

Revision ID: **Stop**

Item Name: Wearplate

Start Date: 7/25/2011 **Start Qty:** 2.00 **Cust Item ID:**

Required Date: 7/26/2011 **Req'd Qty:** 2.00 **Customer:**

Reference:

Approvals: **Process Plan:** _____ **Date:** _____ **Tooling:** _____ **Date:** _____ **Run Start**

QC: _____ **Date:** _____ **SPC (Y/N):** _____ **Date:** _____ **Stop**

Sequence ID/ Work Center ID	Operation Description	Set Up/ Run Hours	Tool ID	Tool #	Plan Code	Accept Qty	Reject Qty	Reject Number	Insp. Stamp
160	QC10- Inspect visual per QSI004- ground welds	0.00							
QC	Memo	0.00							
Quality Control						11.07.26			(2)
170	QC5- Inspect part completeness to step on W/O	0.00							
QC	Memo	0.00							
Quality Control						11	07	26	(2)
180	Grey Sandtex(Ref:4.3.5.6) per QSI005 4.3	0.00							
Powdercoat	M117338. Memo	0.00							
Powder Coating	START TIME: 1:45. OVEN TEMPERATURE: 320° FINISH TIME: 2:15.					2 BL.	11-7-26		

Dart Aerospace Ltd

W/O:		WORK ORDER CHANGES					
DATE	STEP	PROCEDURE CHANGE	By	Date	Qty	Approval Chief Eng / Prod Mgr	Approval QC Inspector

Part No: _____ **PAR #:** _____ **Fault Category:** _____ **NCR:** Yes No **DQA:** _____ **Date:** _____

Resolution: _____ **Disposition:** _____ **QA: N/C Closed:** _____ **Date:** _____

NCR:		WORK ORDER NON-CONFORMANCE (NCR)						
DATE	STEP	Description of NC Section A	Corrective Action Section B			Verification Section C	Approval Chief Eng	Approval QC Inspector
			Initial Chief Eng	Action Description Chief Eng	Sign & Date			

NOTE: Date & initial all entries

H:\fFORMS\Quality Assurance\approved QA\NCRWO RevE

Work Order ID 72426

Monday, July 25, 2011 1:46:06 PM

Item ID: D3315-5 **Accept** **Setup Start**

Revision ID: **Stop**

Item Name: Wearplate

Start Date: 7/25/2011 **Start Qty:** 2.00 **Cust Item ID:**

Required Date: 7/26/2011 **Req'd Qty:** 2.00 **Customer:**

Reference:

Run Start

Approvals: **Process Plan:** _____ **Date:** _____ **Tooling:** _____ **Date:** _____

Stop

QC: _____ **Date:** _____ **SPC (Y/N):** _____ **Date:** _____

Sequence ID/ Work Center ID	Operation Description	Set Up/ Run Hours	Tool ID	Tool #	Plan Code	Accept Qty	Reject Qty	Reject Number	Insp. Stamp
190	QC3- Inspect Part Finish	0.00							
QC	**Memo**	0.00				2	ϕ		11/07/26
Quality Control									
200		0.00							
Packaging	Packaging								
Packaging	**Memo**	0.00							
	Identify on inside surface using a permanent fine point marker with the following: TCCA-PDA, Dart Aerospace Ltd. P/N: D3315-5, B/N: BXXXXX For Product Eligibility see PDA04-17 and Stock Location: 496A								
210	QC21- Final Inspection - Work Order Release	0.00							
QC	**Memo**	0.00							
Quality Control									

11/7/26 (2x)

11/7/26

11-07-26

Dart Aerospace Ltd

W/O:		WORK ORDER CHANGES					
DATE	STEP	PROCEDURE CHANGE	By	Date	Qty	Approval Chief Eng / Prod Mgr	Approval QC Inspector

Part No: _____ **PAR #:** _____ **Fault Category:** _____ **NCR:** Yes No **DQA:** _____ **Date:** _____

Resolution: _____ **Disposition:** _____ **QA: N/C Closed:** _____ **Date:** _____

NCR:		WORK ORDER NON-CONFORMANCE (NCR)						
DATE	STEP	Description of NC Section A	Corrective Action Section B			Verification Section C	Approval Chief Eng	Approval QC Inspector
			Initial Chief Eng	Action Description Chief Eng	Sign & Date			

NOTE: Date & initial all entries

H:\fFORMS\Quality Assurance\approved QA\NCRWO RevE

Picklist Print

Monday, July 25, 2011 1:46:13 PM

Work Order ID: 72426

Parent Item: D3315-5

Parent Item Name: Wearplate

Start Date: 7/25/2011 **Required Date:** 7/26/2011

Start Qty: 2.00 **Required Qty:** 2.00

Comments: IPP: A□05.05.12□New issue □KJ/JLM□
IPP Rev:B As per Rev B 06-03-24 JLM
IPP Rev:C Now on Waterjet 07-07-11 JLM

Component Item ID/ Item Name	Replacement Item ID	Mfg/ Purch	Bin Item	Primary Location	Last Location	Route Seq ID	Unit of Measure	Qty on Hand	Qty per Kit	Total Qty	Qty Issued	Date Issued	Status
M1010S16GA 1010/1025 sheet 16GA		Purchased	No			100	sf	150.5000	1.8345	3.862105			

Location	Loc Qty	Loc Code
MAT019	150.5	
116791	32.5	
117500	118	

4.0 11/07/25

Dart Aerospace Ltd

W/O:		WORK ORDER CHANGES					
DATE	STEP	PROCEDURE CHANGE	By	Date	Qty	Approval Chief Eng / Prod Mgr	Approval QC Inspector

Part No: _____ **PAR #:** _____ **Fault Category:** _____ **NCR:** Yes No **DQA:** _____ **Date:** _____

Resolution: _____ **Disposition:** _____ **QA: N/C Closed:** _____ **Date:** _____

NCR:		WORK ORDER NON-CONFORMANCE (NCR)						
DATE	STEP	Description of NC Section A	Corrective Action Section B			Verification Section C	Approval Chief Eng	Approval QC Inspector
			Initial Chief Eng	Action Description Chief Eng	Sign & Date			

NOTE: Date & initial all entries

H:\fFORMS\Quality Assurance\approved QA\NCRWO RevE

DART AEROSPACE LTD	Work Order:	72426
Description: Wearplate	Part Number:	D3315-5
Inspection Dwg: D3315 **Rev:** B		Page 1 of 1

FIRST ARTICLE INSPECTION CHECKLIST

[X] First Article [ ] Prototype

Drawing Dimension	Tolerance	Actual Dimension	Accept	Reject	Method of Inspection	Comments
34.31	+/-0.030	34.31	✓		RA04	TAPE
30.215	+/-0.010	30.215	—		"	
24.215	+/-0.010	24.220	—		"	
21.611	+/-0.010	21.615	—		"	
17.965	+/-0.010	17.970	—		"	
16.026	+/-0.010	16.030	—		"	
14.735	+/-0.010	14.735	—		"	
12.815	+/-0.010	12.817	—		"	
6.465	+/-0.010	6.465	—		RA04	TAPE
5.464	+/-0.010	5.464	—		RA26	Jern
4.527	+/-0.010	4.530	—		"	
3.550	+/-0.010	3.560	—		"	
5.214	+/-0.010	5.211	—		"	
Ø0.300	+0.006/-0.001	.301	—		"	
Ø0.266 x 0.575	+/-0.010	.267x.577	—		"	
Ø0.266 x 0.450	+/-0.010	.268X.453	—		"	Jern

Measured by:		Audited by:		Prototype Approval:	N/A
Date:	11/07/25	Date:	11.07.25	Date:	N/A

Rev	Date	Change	Revised by	Approved
A	08.01.22	New Issue	KJ/EC/DD	

Dart Aerospace Ltd

W/O:		WORK ORDER CHANGES					
DATE	STEP	PROCEDURE CHANGE	By	Date	Qty	Approval Chief Eng / Prod Mgr	Approval QC Inspector

Part No: _____ **PAR #:** _____ **Fault Category:** _____ **NCR:** Yes No **DQA:** _____ **Date:** _____

Resolution: _____ **Disposition:** _____ **QA: N/C Closed:** _____ **Date:** _____

NCR:		WORK ORDER NON-CONFORMANCE (NCR)						
DATE	STEP	Description of NC Section A	Corrective Action Section B			Verification Section C	Approval Chief Eng	Approval QC Inspector
			Initial Chief Eng	Action Description Chief Eng	Sign & Date			

NOTE: Date & initial all entries

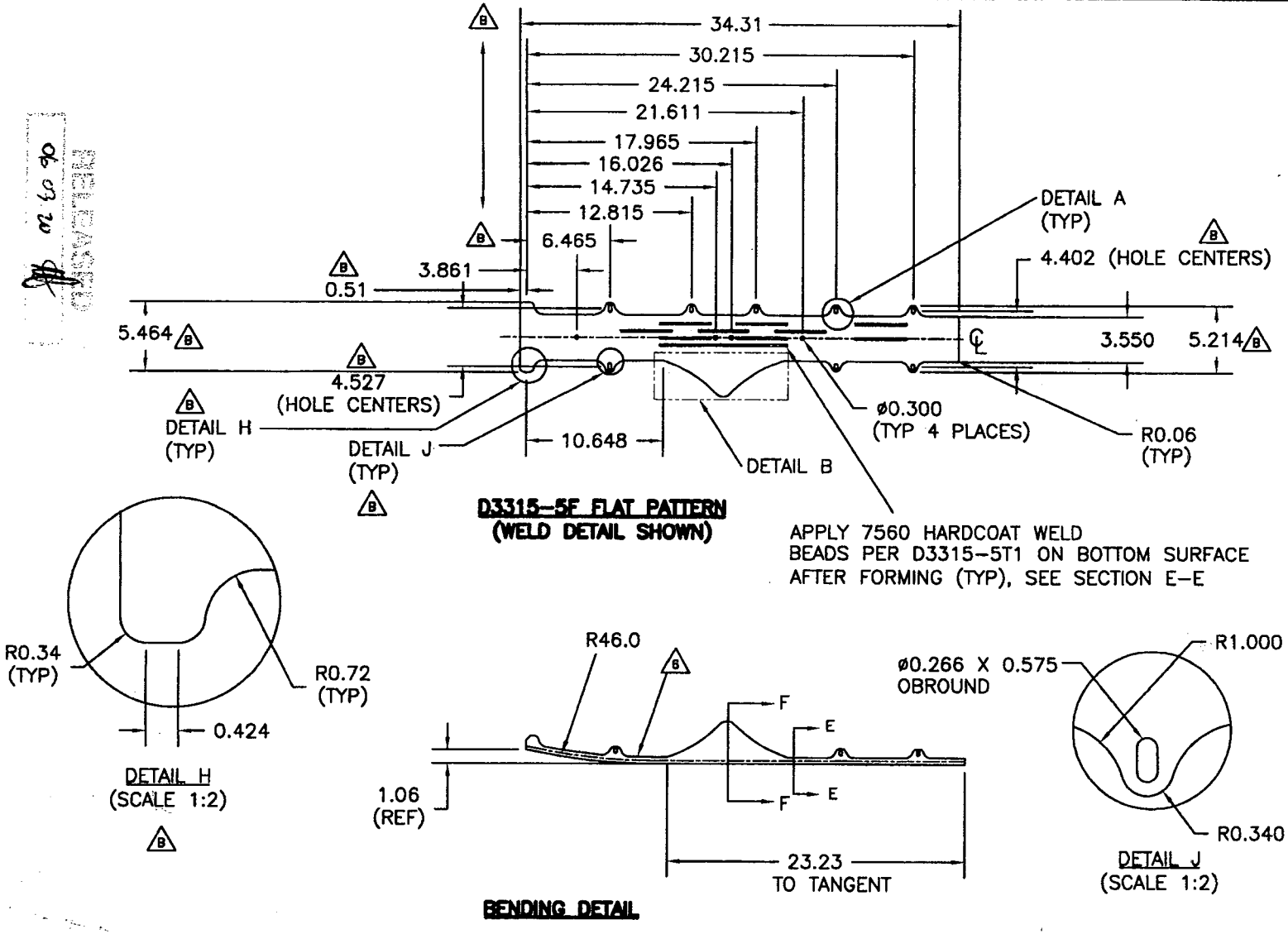

D3315-5F FLAT PATTERN
(WELD DETAIL SHOWN)

BENDING DETAIL

D3315-5 WEARPLATE SHOWN (-6 OPPOSITE)

1) MATERIAL: AISI 1010-1025 OR ASTM A36/A366/A1008 OR CSA G40-21, 38W/44W/50W/60W/70W SERIES STEEL 16 GAUGE (0.060 THICK)
2) FINISH: POWDER COAT GREY SANDTEX (REF.4.3.5.6) PER DART QSI 005 4.3
3) WELD PER DART QSI 004
4) TOLERANCES ARE PER DART QSI 018 UNLESS OTHERWISE NOTED
5) ALL DIMENSION ARE IN INCHES
6) IDENTIFY ON INSIDE SURFACE AS INDICATED "TCCA-PDA, DART AEROSPACE LTD., P/N D3315-X B/N BXXXXX, FOR PRODUCT ELIGIBILITY SEE PDA05-17"

DESIGN: PH	DRAWN BY: PH	DART AEROSPACE LTD HAWKESBURY, ONTARIO, CANADA	
CHECKED	APPROVED	DRAWING NO. D3315	REV. B
DATE 06.01.31		TITLE WEARPLATE	SHEET 3 OF 4
			SCALE 1:12

Dart Aerospace Ltd

W/O:		WORK ORDER CHANGES					
DATE	STEP	PROCEDURE CHANGE	By	Date	Qty	Approval Chief Eng / Prod Mgr	Approval QC Inspector

Part No: _____ **PAR #:** _____ **Fault Category:** _____ **NCR:** Yes No **DQA:** _____ **Date:** _____

Resolution: _____ **Disposition:** _____ **QA: N/C Closed:** _____ **Date:** _____

NCR:		WORK ORDER NON-CONFORMANCE (NCR)						
DATE	STEP	Description of NC Section A	Corrective Action Section B			Verification Section C	Approval Chief Eng	Approval QC Inspector
			Initial Chief Eng	Action Description Chief Eng	Sign & Date			

NOTE: Date & initial all entries

H:\fFORMS\Quality Assurance\approved QA\NCRWO RevE